Article

Electrical machines with HTS windings – prospective schemes, design algorithm, and specific power dependences

N. S. Ivanov[1,*], S. V. Zhuravlev[1], V. A. Kaderov[1], N. A. Malevich[1], Bruno Duine[2]

1 Moscow Aviation Institute, 125993, Moscow, Russia

* e-mail: n.s.ivanov88@gmail.com

2 Universite de Lorraine Grp Rech Elect & Electrotech Nancy, France

The parameters calculation results for electric machines with HTS armature windings have been provided in this Article. Various machine schemes using HTS field winding, permanent magnets, tooth and annular armature windings have been considered. A design algorithm that takes into account system level requirements, analytical calculations, finite element modeling, as well as heat and mechanical calculation have been proposed. Specific power dependences for 77 K and 20 K machines have been found from the analytical method and optimization calculation based on it. It has been proved that the method developed allows finding specific power for various machines. Specific power dependences presented in this Article can be used for system level design.

Keywords: synchronous rotor machine, specific power of electric machines, HTS armature winding, 20 K machine, LH2.

1. Introduction

Used in electrical machines, superconductive materials increase their specific power. Several topologies of HTS machines are considered promising such as rotor-wound machines, machines with AC HTS stator windings, superconductive «permanent magnet» machines, machines made from HTS bulks and HTS stacks of tapes, and flux modulation machines [1]. High specific power of HTS electrical machines gives way to designing new systems and devices such as electrical propulsion systems for large aircraft [2–3]. In this Article, we have considered machines with HTS armature windings and excitation, which utilize permanent magnets (PM) or HTS-field windings. The properties of modern HTS tapes are such that they can be only manufactured in the shape of round or racetrack coils [4] proposed for electric unmanned air vehicle (UAV). Descriptions of prospective schemes of machines with HTS windings have been provided. Comparisons between the most promising of them in terms of specific power found by analytical calculation method have been presented. The design algorithm which includes system level requirements has also been proposed. In general, the results provided in this Article can be used for system level design.

2. Machine schemes

The mechanical properties of modern HTS tapes [5–8] allow manufacturing armature windings designs with tooth and annular racetrack coils. Please refer to Table 1 below for possible schemes of machines with armature HTS windings and various excitation type and magnetic circuit properties. Figure 1 illustrates those layouts. Magnetic circuit types can be:

- Ironless — where the rotor core, pole cores, and the teeth are non-magnetic, with only the stator core being magnetic to provide insulation of the environment from magnetic fields;
- Dual-core — where the rotor and the stator cores are magnetic, while the pole cores and the teeth are non-magnetic;
- Dual-core and teeth — where the rotor and the stator cores, and the teeth are magnetic, while the pole cores are non-magnetic.

To insulate the environment from high-power magnetic fields produced by HTS windings, an outer shield should be used. In the machines in question, it could be a ferromagnetic or an electromagnetic shield that could be integrated with the stator core (see Figure 1).

In practical terms, some of the schemes provided in Table 1 do not seem rational. E.g., machine Option #1 has a significant non-magnetic gap, which does not allow achieving high values of magnetic induction in the air gap by using modern permanent magnets. Increasing the specific power of the machines

from a layout like this one is possible by utilizing magnetized HTS stacks [9]. Machine Option # 2 can be made completely without ferromagnetic parts. However, in the latter case, the magnetic resistance of the circuit turns out to be so strong that the energy of permanent magnets becomes insufficient to generate a significant magnetic field. Therefore, increasing the power, in turn, means increasing the machine's dimensions. This problem can be solved by using HTS windings that operate at or below 20 K (see Option #10). On the other hand, the weight of the electromagnetic shield made of copper or aluminum will be significant due to the strong magnetic fields generated by the HTS windings. An external shield can be also made with HTS, but it will increase the cryogenic system's weight and dimensions, and the overall design complexity of machine as well, which is why the latter scheme will only be rational for a limited number of applications. On the contrary, machines with the magnetic system that uses a rotor and stator yoke and teeth (see Options #4, #7, #8, #12, #15, and #16) have a low magnetic circuit resistance. However, due to presence of the ferromagnetic cores, the magnetomotive force (MMF) of the excitation, the armature windings, and the magnetic fields generated by them are limited by the saturation of the steel. Thus, the schemes in question will not allow achieving a significant increase in the specific power of the machines. In addition, the presence of ferromagnetic materials operating in alternating magnetic fields will cause losses, which is why an increase in the power of the cryogenic system, or a significant complication of the machine designs to develop individual cryostats for HTS coils will be required.

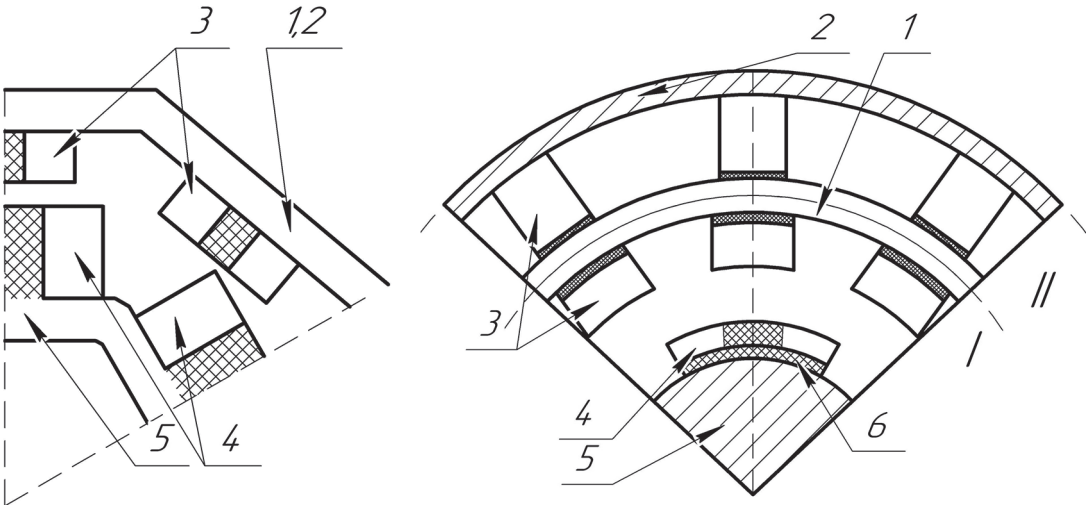

(a) (b)

Fig. 1. Layouts of HTS machines: a) – with teeth HTS stator winding, b) – with annular HTS stator winding
1 – Stator core, 2 – Outer shield (ferromagnetic or electromagnetic), 3 – HTS coils of armature winding,
4 – HTS coils of field winding, or PM, 5 – Rotor core (magnetic, or non-magnetic), 6 – Supports

Machines with ring windings are good when have a small axial length and a significant diameter. However, in this case, the presence of an external ferromagnetic shield significantly increases the inductance of the armature winding, which, in turn, necessitates increasing the excitation winding's MMF. As a result, the size of the machine increases, while the presence of heavy steel magnetic cores and a screen does not allow increasing its specific power. Thus, it is impossible to achieve high-value specific power by using schemes #5 and #13.

It is fair to conclude from the analysis conducted that six schemes are of interest for further consideration, namely, 3, 6, 9, 11, and 14 (see Table 1 below).

Table 1. Layouts of HTS machines

№	Excitation	Armature winding scheme	Magnetic circuit	Shield
1	PM	Teeth	Iron-less	Ferromagnetic
2	PM	Teeth	Iron-less	Electromagnetic
3	PM	Teeth	2 cores	No
4	PM	Teeth	2 cores and teeth	No
5	PM	Annular	2 cores	Ferromagnetic
6	PM	Annular	2 cores	Electromagnetic
7	PM	Annular	2 cores and teeth	Ferromagnetic
8	PM	Annular	2 cores and teeth	Electromagnetic
9	Field winding	Teeth	Iron-less	Ferromagnetic
10	Field winding	Teeth	Iron-less	Electromagnetic
11	Field winding	Teeth	2 cores	No
12	Field winding	Teeth	2 cores and teeth	No
13	Field winding	Annular	2 cores	Ferromagnetic
14	Field winding	Annular	2 cores	Electromagnetic
15	Field winding	Annular with teeth	2 cores and teeth	Ferromagnetic
16	Field winding	Annular with teeth	2 cores and teeth	Electromagnetic

3. Design algorithm

Initial parameters have to be selected to do calculations of the HTS machine characteristics. HTS electrical machines have strong couplings with cryogenic systems. Besides, the couplings with electronic power devices, and system requirements including voltage quality, overload, mechanical conditions, etc have to be taken into account as well, which means that initial parameters should be formulated, based on the system's layout and requirements.

Figure 2 below shows, by way of illustration, an algorithm for designing a HTS machine. Figure 2 suggests that the first steps include selecting the system layout and requirements containing the initial data for machines having been specified. The machines design methodology includes finding the distribution of magnetic fields within the machine's core analytically, by optimization calculation based on analytical calculations, finite-element modeling (FEM) (static and transient), and optimization. Besides, the verification calculations in accordance with the algorithm include both heat and mechanical computations, as well as finding AC losses in the HTS windings. These tasks take significant computational power, as well as the development of new approaches. That is why it is impractical to use them as part of the optimization method.

The analytical approach to finding magnetic field distributions within the machine's core provides rapid calculation of machine's parameters. This method is used to conduct optimization calculation. The optimization calculation yields machine parameters that meet the requirements, and provide the highest specific power. Those parameters are utilized as the source data to FEM. Optimization using finite element models of electrical machines that take into account the nonlinear properties of HTS materials requires preliminary calculation and selection of the starting point. The optimization calculation results based on analytical expressions are the starting point to saving considerable amounts of the required computational time.

Transient modeling also makes part of the algorithm. It allows managing various parameters of the machines while in various operation modes, and meeting the system requirements. E.g., finding the phase

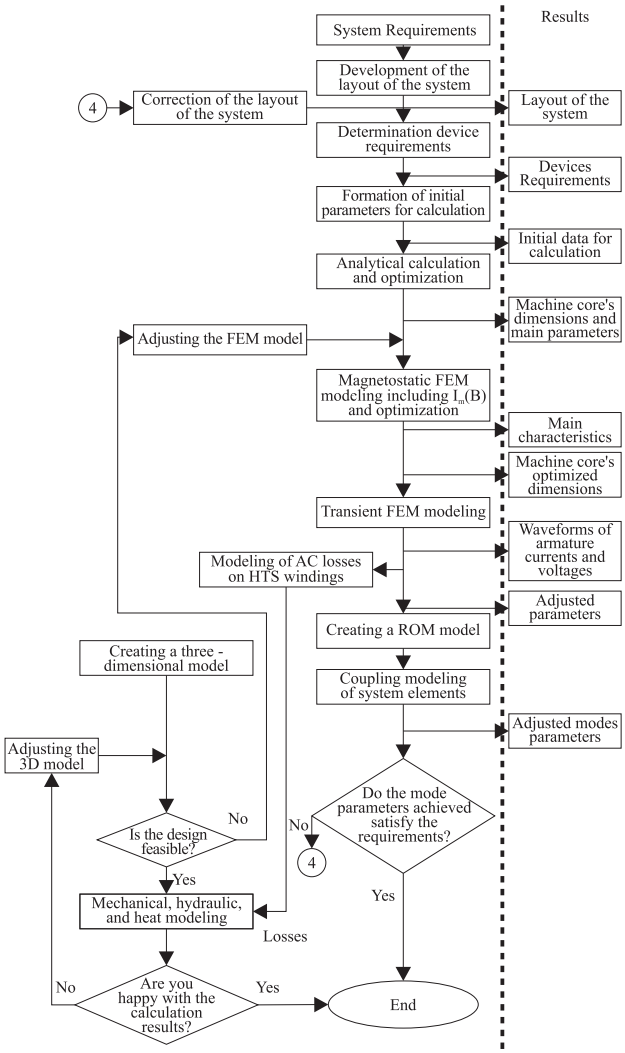

Fig. 2. Design algorithm

voltage quality values required for machines that operate in aircraft systems can only be done by transient modeling. Besides, in some cases, studies of machine parameters have to be conducted when a machine operates in coupling with digital power devices and switching equipment, where co-simulation of the machine and other devices is used. A representation of the electrical machine that behaves in all regards as the FEM model, while considerably reducing computational complexity, is required. For such processes, reduced-order models (ROM) could be used. ROMs are built by advanced mathematical methods that combine the solver result from a set of design points to form a standalone digital object. Thereby, the final ROM can be utilized outside of its production environment for near real-time analysis [10, 11].

4. Analytical calculation method

The analytical methodology for the calculating the basic parameters of the HTS machines in question has been developed. This methodology is based on solving Poission's equations for the vector magnetic potential $\Delta A=-\mu\mu_0 j$, where A is the vector magnetic potential, j is the current density, μ0 is the permeability of vacuum, and μ is the relative magnetic permeability. Solving this equation for various areas of the machine's core with their respective boundary conditions yields the expressions for A. This method applied to various machine Layouts is described in details in [12–15].

The analytical expressions obtained allow finding detailed distributions of magnetic fields within the machines' cores and taking into account number of pair poles, dimensions of HTS coils, ferromagnetic cores, HTS tapes properties and so on. In general, they allow finding the outer parameters of HTS machines.

Based on the analytical expressions obtained, an optimization method has been developed. The problem of designing HTS electric machines can be considered as a problem of single-criteria conditional optimization. The continuous iteration method (the grid method) has been chosen to solve the problem from the known methods of single-criteria optimization. Using this method, one is able to find the global extremum of the objective function; the method, however, is time-consuming as it takes computing considerable numbers of points. Nonetheless, the analytical expressions can provide multiple calculations per time unit. In addition, the constraints used in the calculation allow in some cases to significantly reduce the search area.

Overall, the proposed calculation method is based on simple analytical expressions that take into account the relationship between the output characteristics of the machine and the dimensions of its core, the properties of the HTS materials used, and the implementation of the continuous iteration method. When calculating the parameters of machines with various layouts, the suitable calculation ratios are used, while the optimization calculation method remains the same. An example of the optimization algorithm is shown on Figure 3 below.

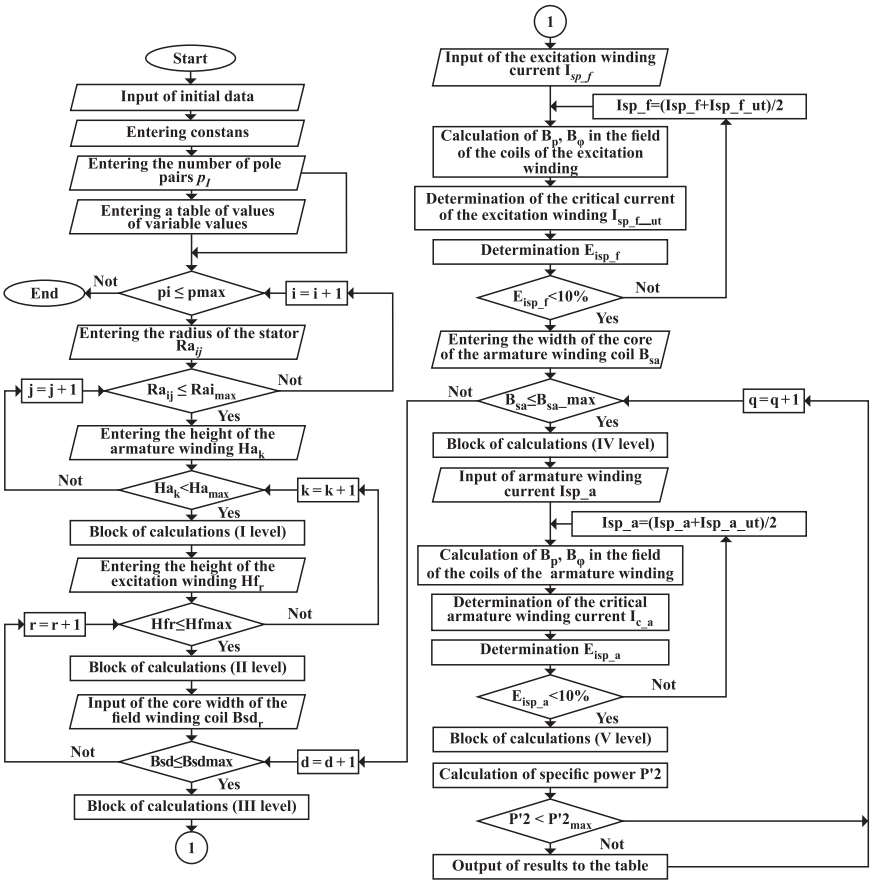

Fig. 3. Optimization algorithm

5. Calculation results

Using the previously developed analytical methodology and the optimization algorithm, specific power dependences for various HTS machines have been obtained. Table 2 below contains the initial data for calculations. The variables used in optimization calculation are as follows:

- The internal radius of the excitation winding;
- The height of the excitation winding;
- The height of the armature winding;
- The height of the permanent magnets;
- The width of the rotor pole core;
- The stator tooth width;
- The number of pole pairs.

The results of calculating the parameters of machines that operate at 77 K and 65 K are shown on the diagrams of Figures 4–5, while those operating at 20 K are shown on Figure 6. The calculated weights of the machines include the weight of HTS field and armature windings, the rotor and the stator cores, the poles and the teeth, and the housing. It is worth mentioning here that specific power includes both active parts and some of the structural components.

The Figures suggest that for nitrogen-cooled machines, the maximum specific power value is that shown on Layout 11 — a machine with a HTS field winding, a tooth HTS armature winding, and a ferromagnetic yoke of the rotor and stator. Some dependences have a maximum due to the limitation imposed on the linear speed of the rotor. The maximum value of the specific power for various Layouts corresponds to their respective rotational speeds.

For 77 K machines with output power of 1000 kW, the specific power can exceed 20 kW/kg at a rotation speed of 6000 rpm. It is also worth noting that machines' dependences vary, depending on their layouts. E.g., the dependences for 65 K show an increased specific power in comparison with those operating at 77 K. The maximum specific power for 65 K nears 30 kW/kg.

As for liquid hydrogen-cooling machines, only one Layout is rational, namely, that of ironless machines with HTS field and teeth HTS armature winding (see Layout 9 of Table 1) due to intense magnetic fields that can be generated by HTS field windings operating at 20 K. In this case, using a magnetic core of the rotor and the teeth becomes irrational due to its saturation. Figure 6 shows the specific power vs the rotational speed for machines with various output powers at 20 K; e.g., machines with LH2 cooling have a specific power up to 40 kW/kg. Each dependence has a maximum that corresponds to rotational speeds exceeding 8000 rpm.

Table 2. Initial parameters and limitations

Parameter	Value
Initial data	
Output power, kW	500, 1000, 1500, 2000
Rotational speed, rpm	2000, 3000, 4000, 6000, 9000, 12000
Temperature, K	77, 65, 20
HTS tape width, mm	4
HTS tape thickness, mm	0.1
Critical current, self-field, A	150 for 77 K
	270 for 65 K
	600 for 20 K
Limitations	
Maximum linear speed of the rotor, m/sec	100 for excitation windings
	600 for permanent magnets
Minimum bending diameter of the tape, mm	20
Allowable steel induction, T	2
Maximum constructive coefficient	3
Required power factor	0,9

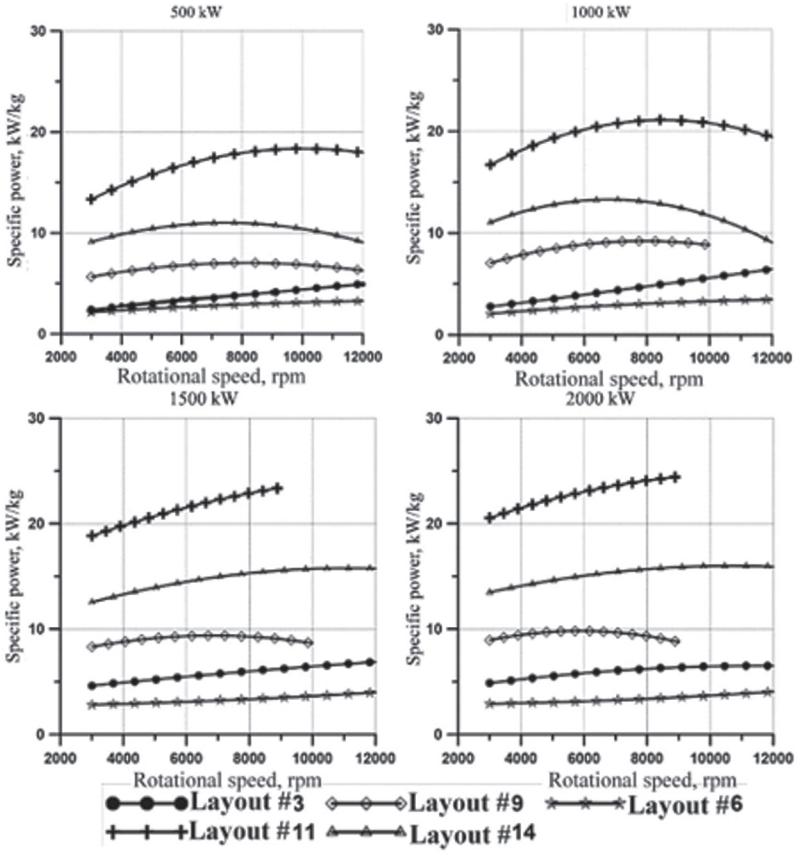

Fig. 4. The specific power vs the rotational speed for various circuits and the output power at 77 K

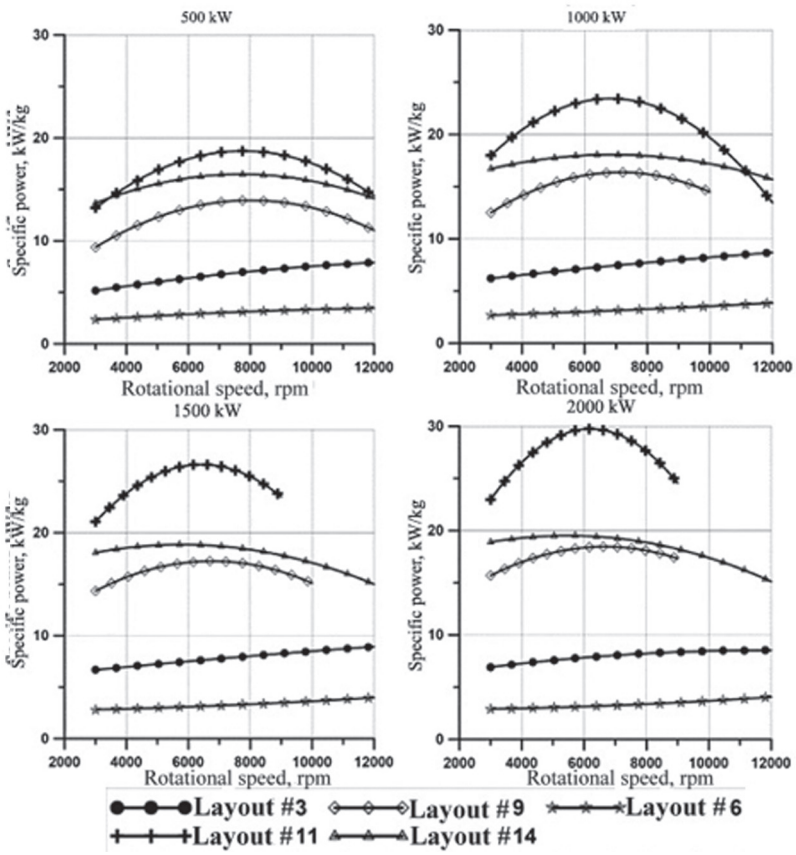

Fig. 5. The specific power vs the rotational speed for various circuits and the output power at 65 K

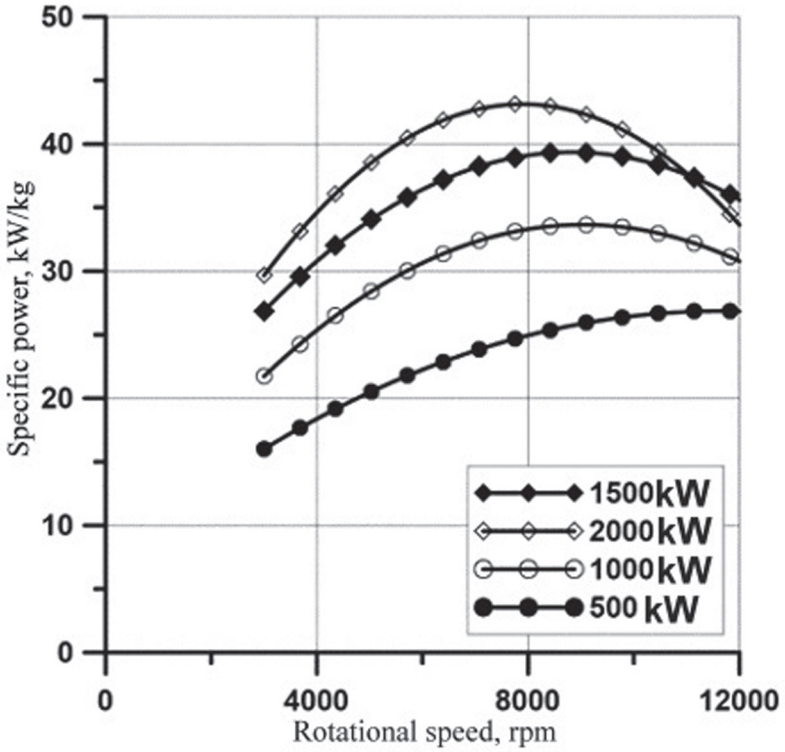

Fig. 6. The specific power vs the rotational speed for various output powers at 20 K

6 . Discussion

The specific power values and the dependences obtained can be used for preliminary calculating of various systems parameters based on HTS machines, be it hybrid propulsion systems, high output power primary energy sources, wind energy systems, etc. Overall, those values have to be adjusted to the weight and dimensions of the cooling system, the mechanical coupling system, the heat insulation, etc. To make those adjustments, various aspects including operation modes, the primary energy source, and load parameters have to be taken into account, which means that specifying requirements for machines will be the next step of machine design.

7. Conclusions

A method for the computation of the basic parameters of HTS electrical machines with various layouts has been proposed in this Article. We have demonstrated that specific power values of HTS electrical machines can exceed 20 kW/kg for those operating at 77 K and 40 kW/kg for those operating at 20 K. Those values are a few times higher than those of conventional rotor machines. The dependences obtained can be used for system level design.

Gratitude

This research has been carried out as part of the state assignment from the Ministry of Science and Higher Education of the Russian Federation (Theme # FSFF-2020-0015).

References

[1] R. Dorget, et. al., Materials **14**, 2847 (2021).
[2] D. Dezhin, et al., ICOECS **1**, (2020).
[3] C. A. Luongo et al., Appl. Supercond. **19**, 3, 1055 (2009).
[4] S. Zanegin, N. Ivanov, et al., J. Supercond. Nov. Magn. **33**, 355 (2020).
[5] SuperOx 2G HTS tape performance and specifications. // www.superox.ru, URL: http://www.superox.ru/products/0001.pdf. (2023).
[6] Fujikura HTS wire properties // https://www.fujikura.com, URL: http://www.fujikura.co.jp/eng/products/newbusiness/superconductors/01/2050256_12808.html.(2023).

[7] S. Kar, et al., Trans. Appl. Supercond. **27**, 4, 1 (2017).
[8] Y. Wang, et al., Trans. Appl. Supercond. **26**, 7, 1 (2016).
[9] A. Patel, et al., Supercond. Science and Tech., **31**, 9, 09LT01 (2018).
[10] Parametric ROMs (Reduced-Order Models) from Fluent steady state analyses. // digitallabs.edrmedeso.com, URL: https://digitallabs.edrmedeso.com/blog/parametric-roms-reduced-order-models-from-fluent-steady-state-analyses. (2023).
[11] Comparison of Reduced Order Model (ROM) Approaches for Electrical Machines. // blogs.3ds.com 2023. URL: https://blogs.3ds.com/simulia/comparison-reduced-order-model-approaches-rom-electrical-machines/. (2023).
[12] S. Zhuravlev, et al., ICOECS **1**, (2019).
[13] D. Dezhin, et al., Trans. Appl. Supercond. **28**, 4, 1 (2018).
[14] S. Zhuravlev, et al., Mater. Res. Express **6**, 7, 076001 (2019).
[15] L. K. Kovalev, et al., Elektrichestvo **5**, 12, **(**2014).

Иванов Николай Сергеевич, кандидат технических наук, Московский авиационный институт (национальный исследовательский университет).

Dr. Nikolay Ivanov. PhD in electrical engineering. Head of the research division of the department 310 «Electric power, electromechanical and biotechnical systems» of the Moscow Aviation Institute.

Журавлёв Сергей Владимирович, кандидат технических наук Московский авиационный институт (национальный исследовательский университет).

Dr. Sergey Zhuravlev. Associate professor, Research fellow at the department 310 «Electric power, electromechanical and biotechnical systems» of the Moscow Aviation Institute.

Кадеров Владимир Андреевич, аспирант, научный сотрудник, Московский авиационный институт (национальный исследовательский университет).

Vladimir Kaderov, PhD student, Research fellow at the department 310 «Electric power, electromechanical and biotechnical systems» of the Moscow Aviation Institute.

Малевич Никита Александрович, научный сотрудник, Московский авиационный институт (национальный исследовательский университет).

Nikita Malevich, Research fellow at the department 310 «Electric power, electromechanical and biotechnical systems» of the Moscow Aviation Institute.

Бруно Дуэйн, профессор в Университете Лотарингии в Вандёвр-ле-Нанси.

Dr. Prof. Bruno Duine, University of Lorraine in Vandoeuvre-les-Nancy.